Street Model (Approach 1 - Full Finish Grade Detail)
Offset Lines for Finish Grade Model

[See the Day 1 Seminar Handbook for the Typical Street Section, curb and gutter detail, and associated dimensions and slopes applied below.]

Step 1: Offset from TBC to back of sidewalk.

- Pick a TBC line and click the **Label Selection** utility button (**Ctrl-L**). This selects both TBC lines.
- Click the **Offset Line** utility button (**Ctrl-O**).
- Spec **Right** for *Offset* direction, **BSW** for *Label*, **3.5** for *Offset Distance*, and **2** for *Slope %*—*Elevation Difference* of **0.07** is calculated by the program.
- Click **View** to preview and, if all looks well, click **Apply** to create the back of walk Data Line.

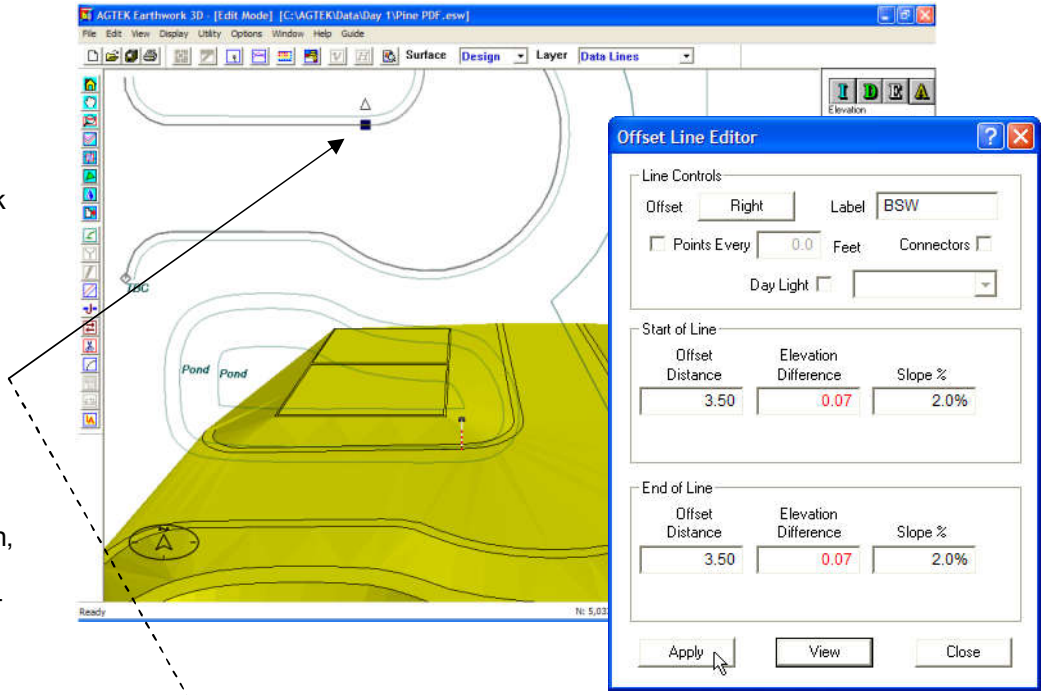

Step 2: Offset from TBC to face of curb.

- Pick a TBC line and click the **Label Selection** utility button (**Ctrl-L**).
- Click the **Offset Line** utility button (**Ctrl-O**).
- Spec **Left** for *Offset* direction, **TFC** for *Label*, **0.5** for *Offset Distance*, and **0** for *Elevation Difference*—*Slope %* of **0** is calculated by the program.
- Click **View** to preview and, if all looks well, click **Apply** to create the top face of curb Data Line.

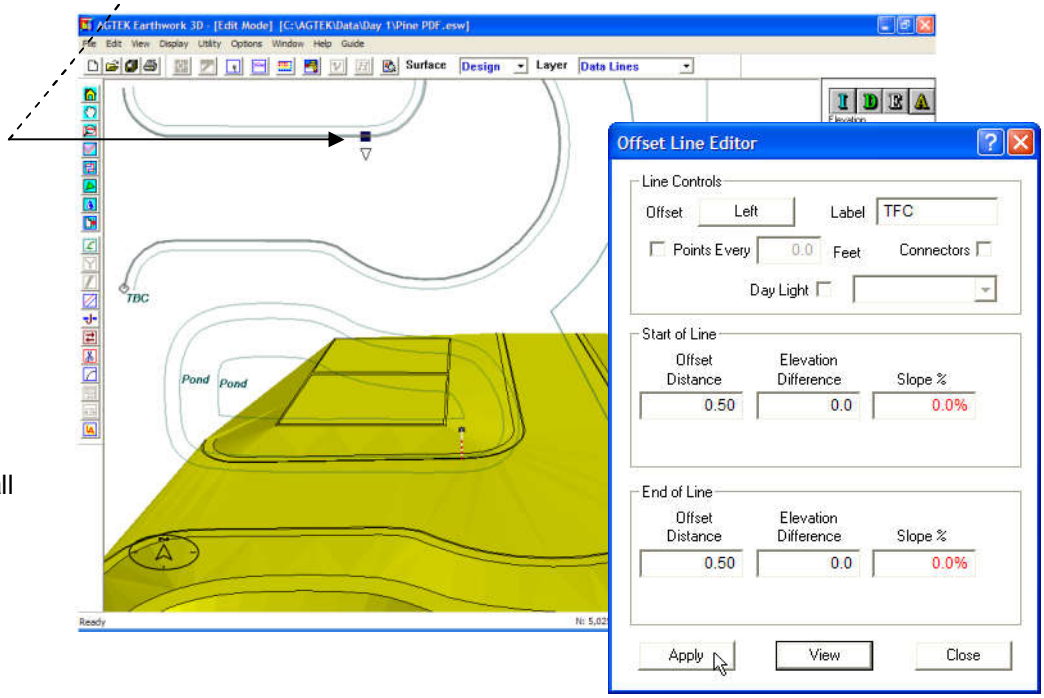

Copyright (c) 2016 Earthwork Software Services, LLC. All rights reserved. www.EarthworkSoftwareServices.com

Street Model (Approach 1 - Full Finish Grade Detail)
Offset Lines for Finish Grade Model (Cont.)

Step 3: Offset from TFC to gutter flow line.

- Pick a TFC line and click the **Label Selection** utility button (**Ctrl-L**). *[Don't pick the TBC line—zoom and/or check the Line Label to be sure.]*
- Click the **Offset Line** utility button (**Ctrl-O**).
- Spec **Left** for *Offset* direction, **GFL** for *Label*, **0.08** for *Offset Distance*, and **-0.5** for *Elevation Difference*—*Slope %* is calculated by the program. *[Dimensions per curb and gutter detail.]*
- Click **View** to preview and, if all looks well, click **Apply** to create the gutter flow line.

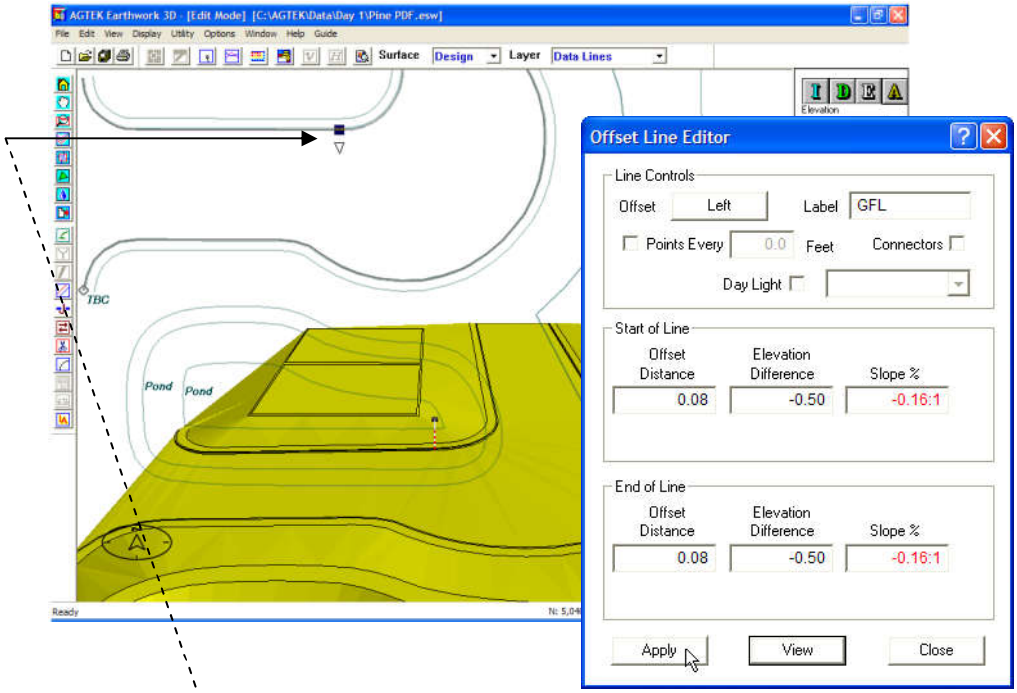

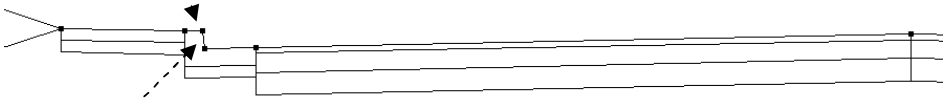

Step 4: Offset from GFL to edge of pavement (lip of gutter).

- Pick a GFL line and click the **Label Selection** utility button (**Ctrl-L**). *[Don't pick the TFC line—zoom and/or check the Line Label to be sure.]*
- Click the **Offset Line** utility button (**Ctrl-O**).
- Spec **Left** for *Offset* direction, **EP** for *Label*, **1.42** for *Offset Distance*, and **2** for *Slope %*—*Elevation Difference* of **0.03** is calculated by the program. *[Dimensions per curb and gutter detail.]*
- Click **View** to preview and, if all looks well, click **Apply** to create the edge of pavement line.

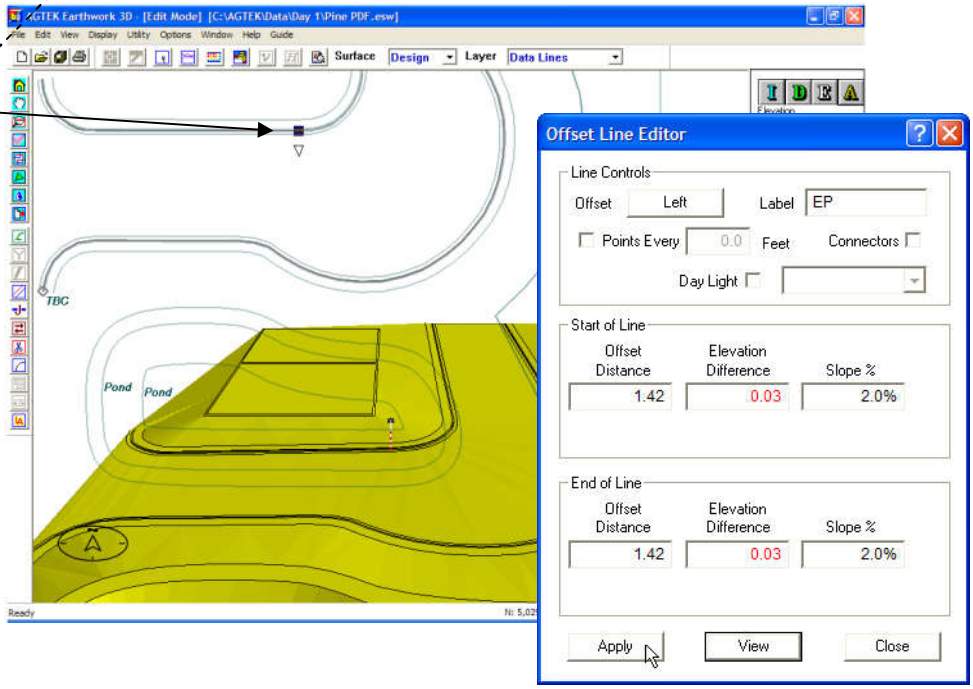

Copyright (c) 2016 Earthwork Software Services, LLC. All rights reserved. www.EarthworkSoftwareServices.com

Street Model (Approach 1 - Full Finish Grade Detail)
Offset Lines for Finish Grade Model (Cont.)

Note: The final offset will model the crown at the street's centerline. This last offset will be made from only *one* of the two EP lines created in Step 4, and it will use a selected range of points (to avoid offsetting the entrance curve into the existing street). Because of the "dog leg" bulge in the south EP line, we will use the north EP line for this offset.

Step 5: Offset from EP to centerline (crown).

- Pick the north EP line at the end-of-curve point (at elevation **247.428** in this example).
- In the *Point Review* scroll, **Left** click the highlighted **247.428** point elevation and (keeping **Left** click depressed) drag select up to the first point in the scroll (elevation **252.128** in this case). We want our offset to be applied only to this selected (highlighted) range of points in the *Point Review* scroll.
- Click the **Offset Line** utility button (**Ctrl-O**).
- Spec **Left** for *Offset* direction, **CL** for *Label*, **18.5** for *Offset Distance*, and **2** for *Slope %*—*Elevation Difference* of **0.37** is calculated by the program. *[Dimension/slope per Typical Section.]*
- Click **View** to preview and, if all looks well, click **Apply** to create the crown line.

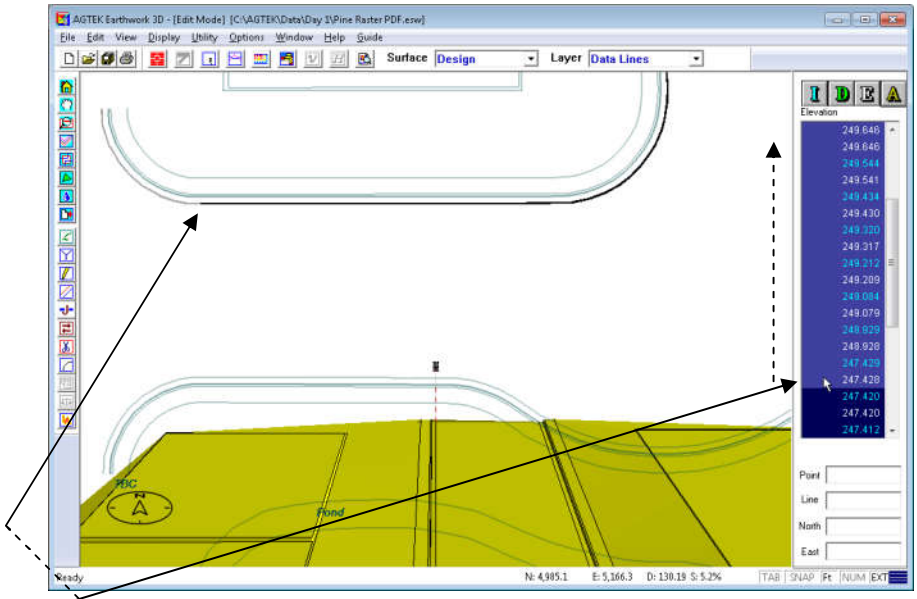

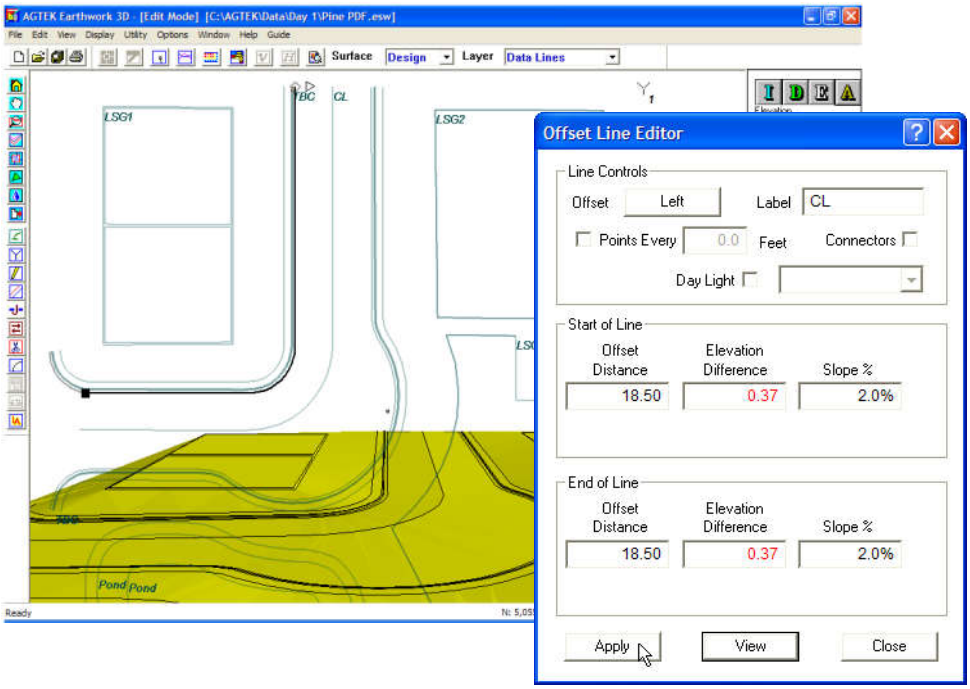

Copyright (c) 2016 Earthwork Software Services, LLC. All rights reserved. www.EarthworkSoftwareServices.com

Street Model (Approach 1 - Full Finish Grade Detail)
Sectional Areas for Subgrade Model

Enter four Sectional Areas (plus one Report Region) for the Street:

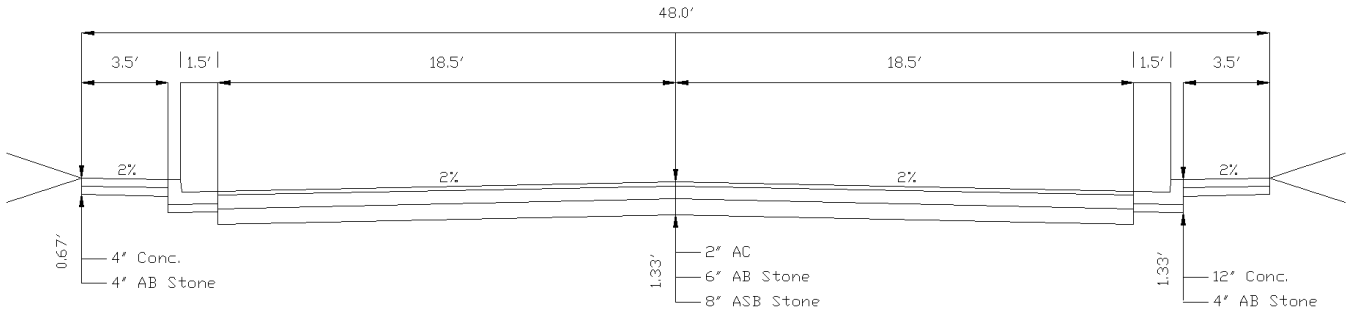

The same independent entry method used for the pond can be applied to the street. In this case, we enter multiple Sectional Areas to derive a correct subgrade model at the street's blacktop, gutter, curb and sidewalk areas *and* gain useful paving quantity information on the volume report. But because we will enter only a single Report Region for the entire street area, we will avoid unnecessary (time-consuming) iterations during volume calculations.

Note: This technique works well for roads and streets (long runs of unbroken curb lines and unchanging subgrade cross-section) but is a little more cumbersome for parking lots (broken curb lines at ingress/egress points, islands, and light/heavy pavement areas).

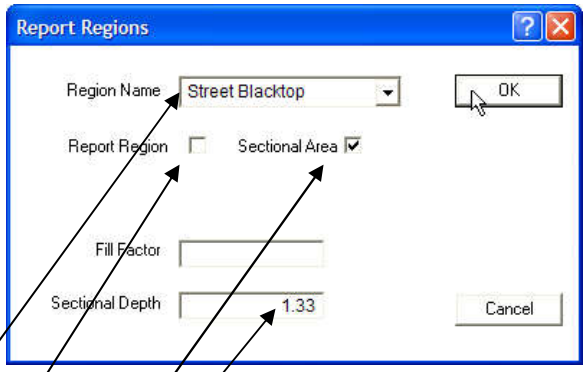

Step 1: Change *Layer* to **Sectional Areas**, click the **Add Regions** utility button and complete the *Report Regions* dialog entries.

- Enter **Street Blacktop** for the *Region Name*.
- If checked, uncheck the **Report Region** option (avoids an unnecessary line item for this area on the Volume Report).
- If unchecked, check the **Sectional Area** option to establish design subgrade at this area based on the specified *Sectional Depth* (enter **1.33** ft. for this exercise).
- Click **OK** to close the dialog and begin entering the Sectional Area boundary.

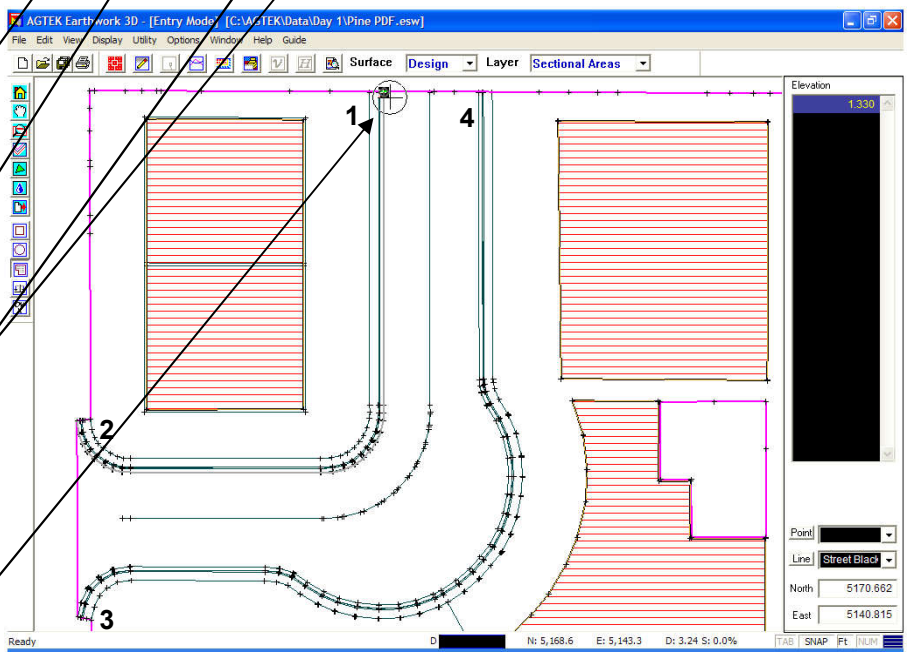

Step 2: *Line Snap* to match the previously entered EP line at the street's four "corners" (see next page for detailed steps).

Copyright (c) 2016 Earthwork Software Services, LLC. All rights reserved. www.EarthworkSoftwareServices.com

Street Model (Approach 1 - Full Finish Grade Detail)
Sectional Areas for Subgrade Model (Cont.)

Line Snapping Tips: Eleven Data Lines were entered for the street: one for centerline (CL) and two each for edge of pavement (EP), gutter flow line (GFL), top face of curb (TFC), top back of curb (TBC), and back of sidewalk (BSW). Some of these lines are very closely spaced, so ***zoom sufficiently*** to be certain that the correct lines are actually being snapped. If the Data Lines are labeled (they are in this example), select **Display > Line Labels** from the menu. Also, the proximity of the Design Perimeter and its associated *Daylight* drape line makes double snapping (with **F8**/**SP**) at the end points of the street lines a little more difficult in this exercise—rather than double snapping *at* the end point, try double snapping the desired line *near* its end point (see note below). If desired (and before doing Step 1) press **Alt-B** and uncheck the *Design Perimeter*, and (in **Edit** mode) pick the perimeter *Daylight* Data Line and press **Alt-H** to hide it (**Alt-S** to show it again). If you do double snap to the wrong line, press the **Backspace** key and try again—if that fails, single snap the end point, then double snap at the next point on the relevant street line.

Note: Rather than starting a line snap *at* the line's end point, a line snap can also be initiated by double snapping (**F8**/**SP**) the line *near* its end point.

Step 2 (Cont.): Start the first EP *Line Snap* by double snapping the EP start point (the snapped line will highlight).

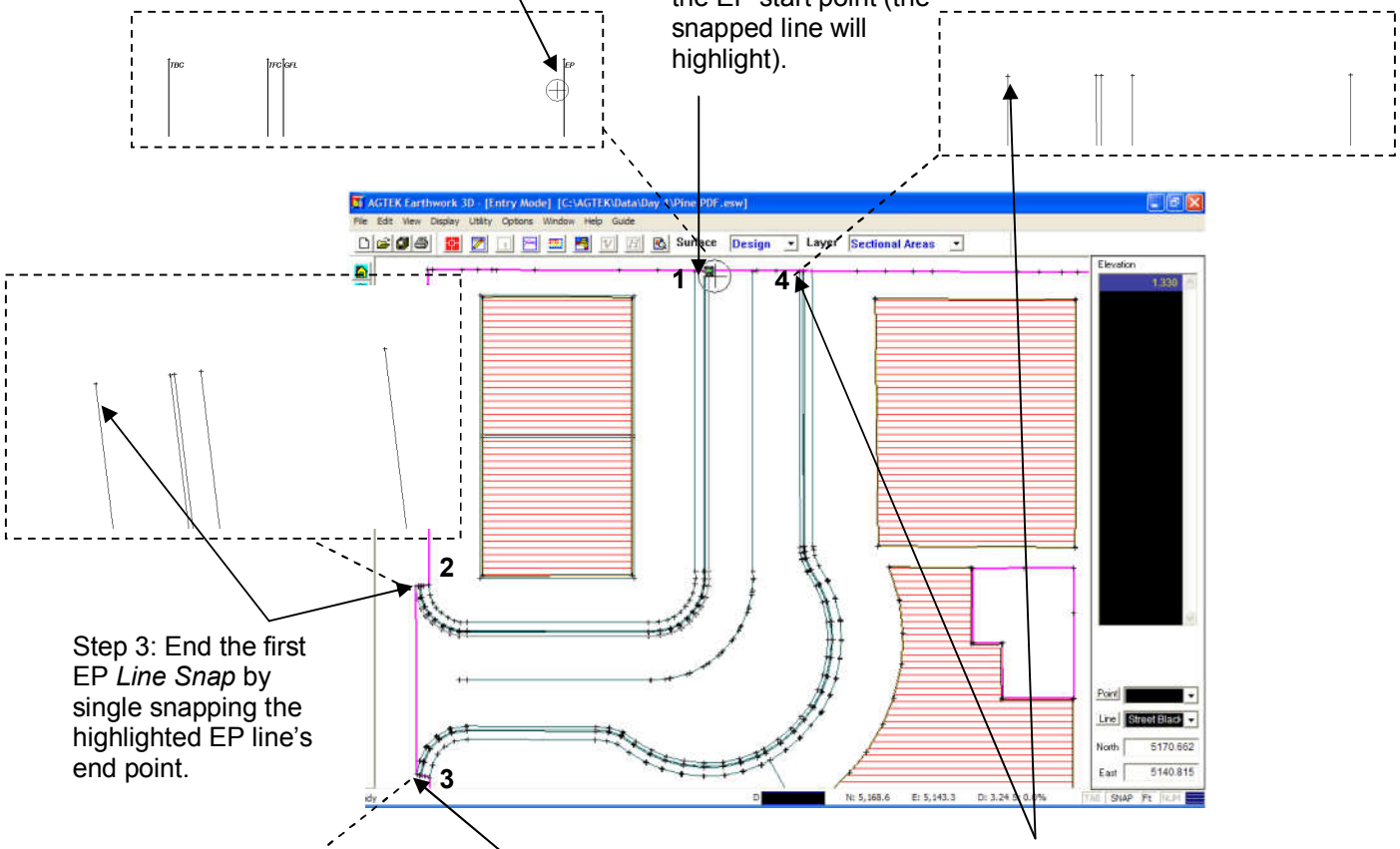

Step 3: End the first EP *Line Snap* by single snapping the highlighted EP line's end point.

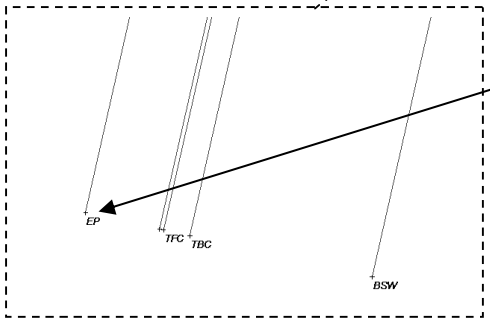

Step 4: Start the second EP *Line Snap* by double snapping at (or near) the EP start point (the snapped line will highlight).

Step 5: End the second EP *Line Snap* by single snapping the highlighted EP line's end point.

Step 6: **Right** click (press **Blank**) twice to finish the entry and return the *Arrow* pointer.

Copyright (c) 2016 Earthwork Software Services, LLC. All rights reserved. www.EarthworkSoftwareServices.com

Street Model (Approach 1 - Full Finish Grade Detail)
Sectional Areas for Subgrade Model (Cont.)

Next, we enter the gutter area . . .

Step 7: Click the **Add Regions** utility button and complete the *Report Regions* dialog entries.

- Enter **Street Gutter** for the *Region Name*.
- If checked, uncheck the **Report Region** option (avoids an unnecessary line item for this area on the Volume Report).
- If unchecked, check the **Sectional Area** option to establish design subgrade at this area based on the specified *Sectional Depth* (enter **0.83** ft. for this exercise).
- Click **OK** to close the dialog and begin entering the Sectional Area boundary.

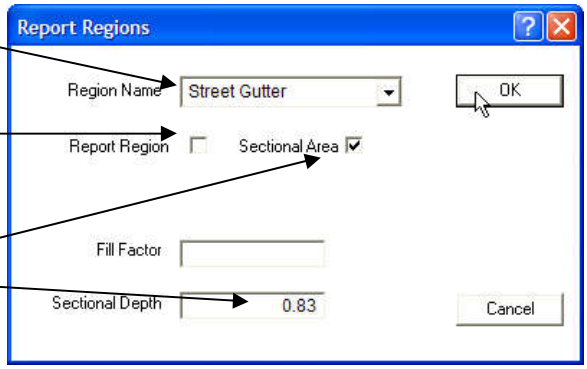

Step 8: *Line Snap* to match the previously entered GFL line at the street's four "corners" (see next page for detailed steps).

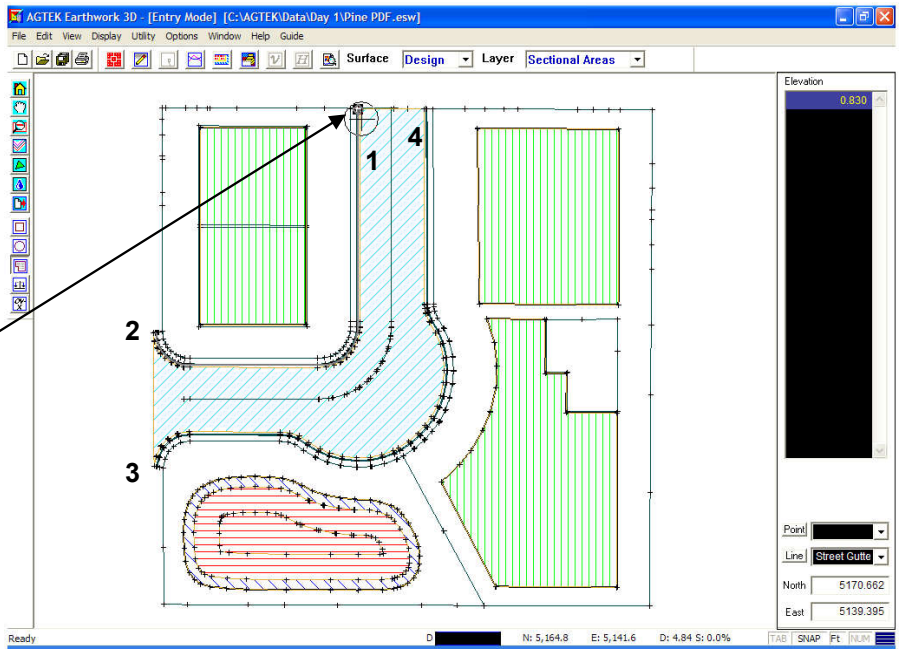

Copyright (c) 2016 Earthwork Software Services, LLC. All rights reserved. www.EarthworkSoftwareServices.com

Street Model (Approach 1 - Full Finish Grade Detail)
Sectional Areas for Subgrade Model (Cont.)

Step 8 (Cont.): Start the first GFL *Line Snap* by double snapping the GFL start point (the snapped line will highlight).

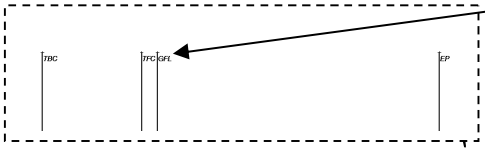

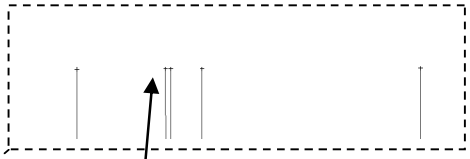

Step 9: End the first GFL *Line Snap* by single snapping the highlighted GFL line's end point.

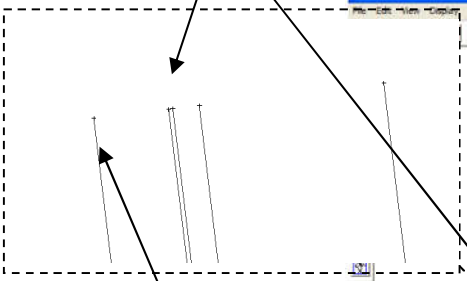

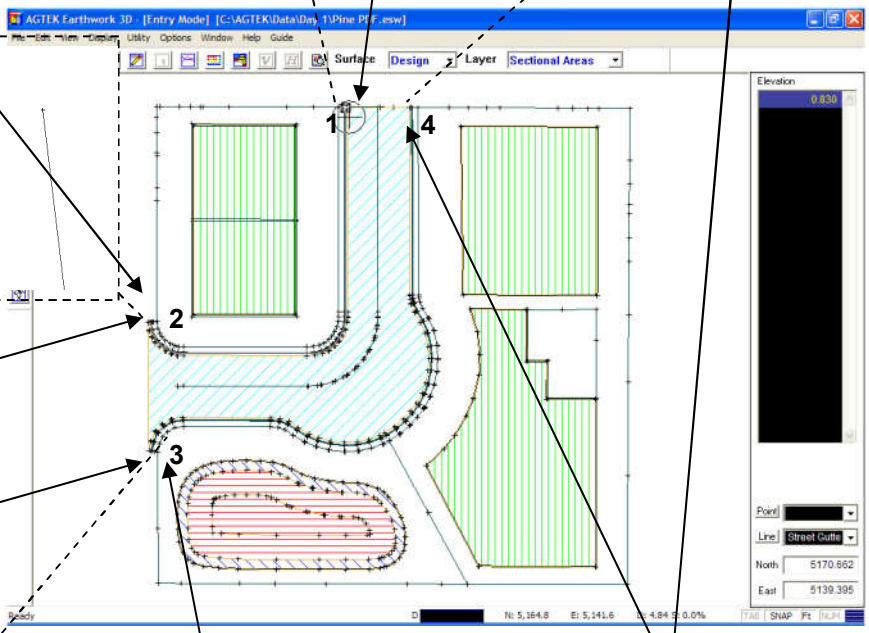

Step 10: Single snap the north EP line's end point.

Step 11: Single snap the south EP line's end point.

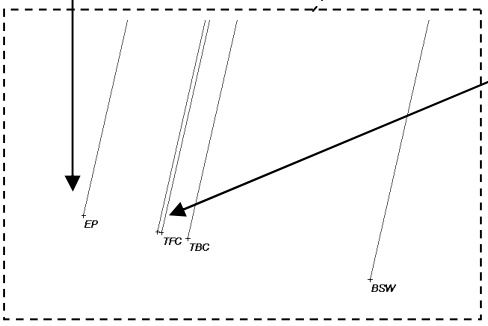

Step 12: Start the second GFL *Line Snap* by double snapping the GFL start point (the snapped line will highlight).

Step 13: End the second GFL *Line Snap* by single snapping the highlighted GFL line's end point.

Step 14: **Right** click (press **Blank**) twice to finish the entry and return the *Arrow* pointer.

Copyright (c) 2016 Earthwork Software Services, LLC. All rights reserved. www.EarthworkSoftwareServices.com

Street Model (Approach 1 - Full Finish Grade Detail)
Sectional Areas for Subgrade Model (Cont.)

Next, we enter the curb area . . .

Step 15: Click the **Add Regions** utility button and complete the *Report Regions* dialog entries.

- Enter **Street Curb** for the *Region Name*.
- If checked, uncheck the **Report Region** option (avoids an unnecessary line item for this area on the Volume Report).
- If unchecked, check the **Sectional Area** option to establish design subgrade at this area based on the specified *Sectional Depth* (enter **1.33** ft. for this exercise).
- Click **OK** to close the dialog and begin entering the Sectional Area boundary.

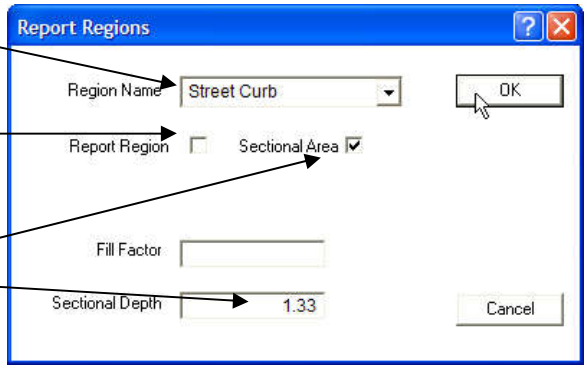

Step 16: *Line Snap* to match the previously entered TBC line at the street's four "corners" (see next page for detailed steps).

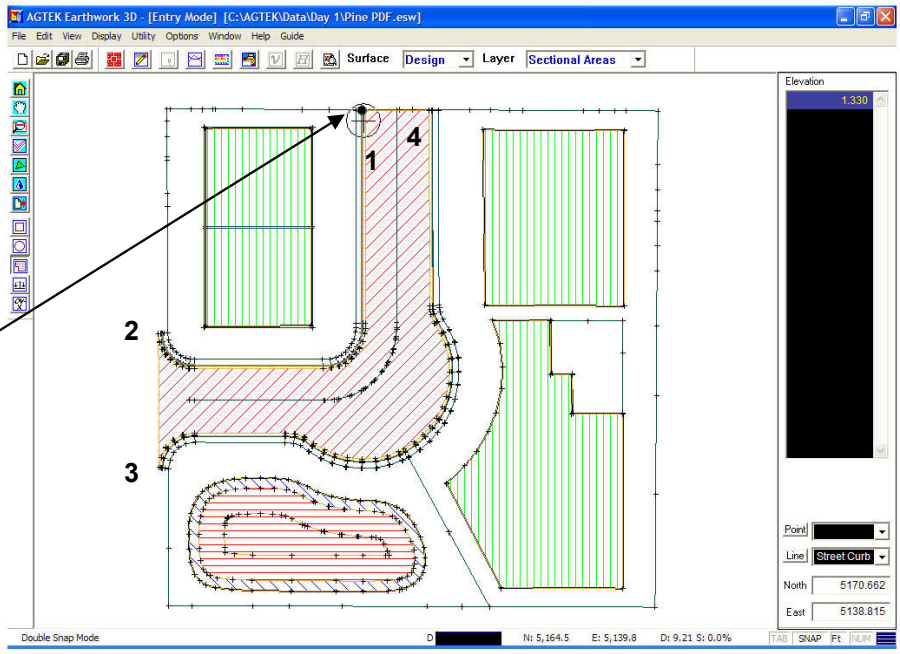

Copyright (c) 2016 Earthwork Software Services, LLC. All rights reserved. www.EarthworkSoftwareServices.com

Street Model (Approach 1 - Full Finish Grade Detail)
Sectional Areas for Subgrade Model (Cont.)

Step 16 (Cont.): Start the first TBC *Line Snap* by double snapping the TBC start point (the snapped line will highlight).

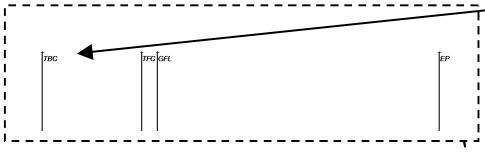

Step 17: End the first TBC *Line Snap* by single snapping the highlighted TBC line's end point.

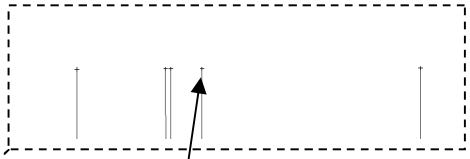

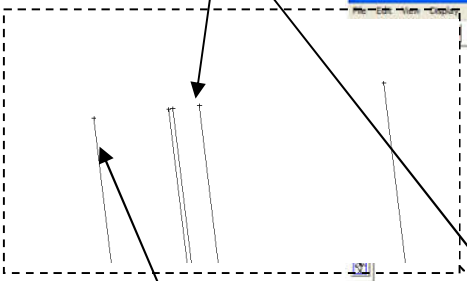

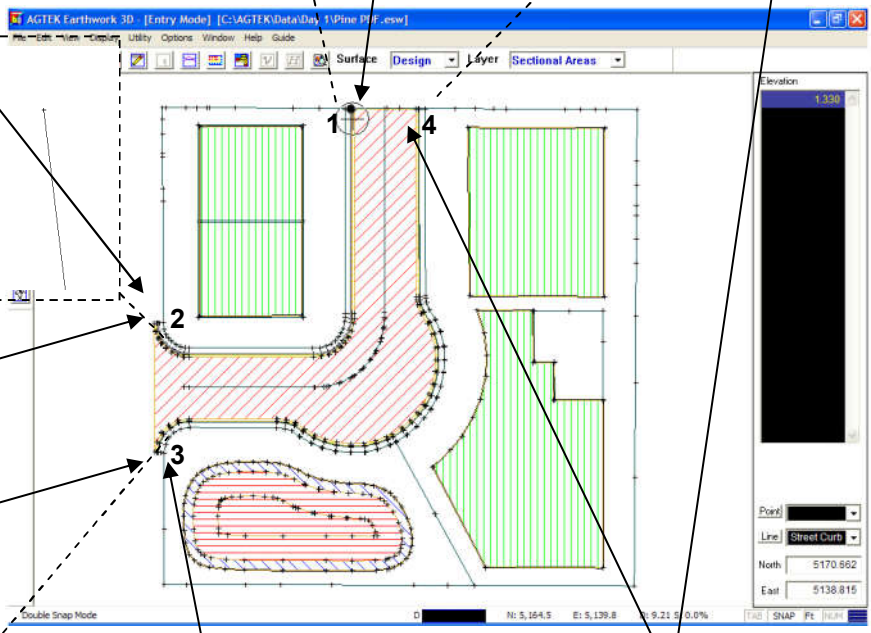

Step 18: Single snap the north EP line's end point.

Step 19: Single snap the south EP line's end point.

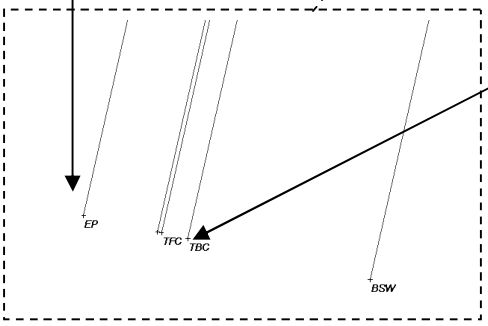

Step 20: Start the second TBC *Line Snap* by double snapping the TBC start point (the snapped line will highlight).

Step 21: End the second TBC *Line Snap* by single snapping the highlighted TBC line's end point.

Step 22: Press **Blank** (**Right** click) twice to finish the entry and return the *Arrow* pointer.

Copyright (c) 2016 Earthwork Software Services, LLC. All rights reserved. www.EarthworkSoftwareServices.com

Street Model (Approach 1 - Full Finish Grade Detail)
Sectional Areas for Subgrade Model (Cont.)

Next, we enter the sidewalk area . . .

Step 23: Click the **Add Regions** utility button and complete the *Report Regions* dialog entries.

- Enter **Street Sidewalk** for the *Region Name*.
- If checked, uncheck the **Report Region** option (avoids an unnecessary line item for this area on the Volume Report).
- If unchecked, check the **Sectional Area** option (to establish design subgrade at this area based on the specified *Sectional Depth* (enter **0.67** ft. for this exercise).
- Click **OK** to close the dialog and begin entering the Sectional Area boundary.

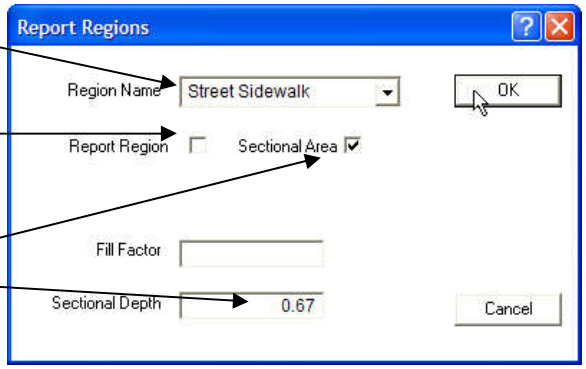

Step 24: *Line Snap* to match the previously entered BSW line at the street's four "corners" (see next page for detailed steps).

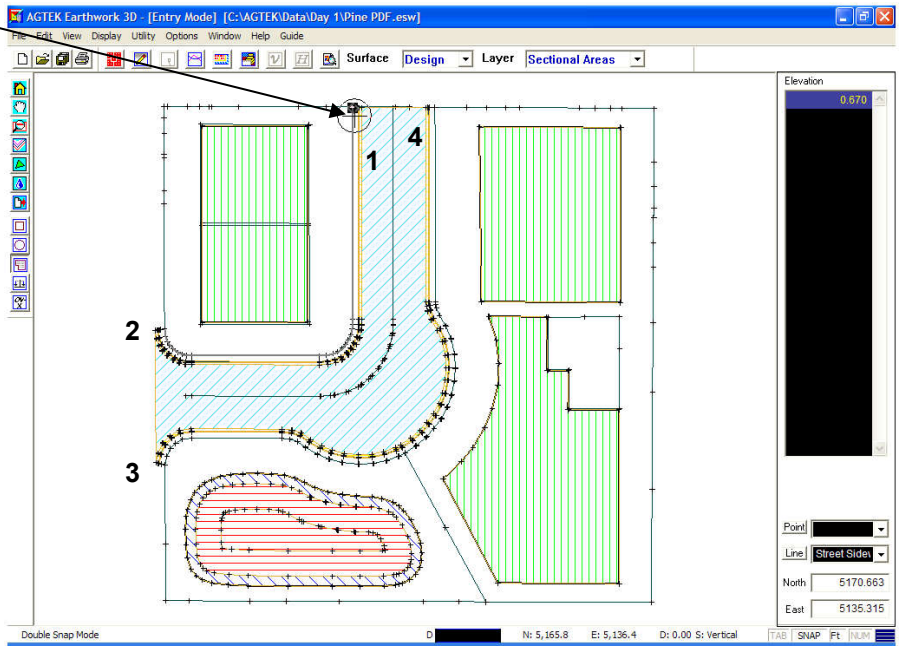

Tip: The Sectional Areas previously entered in Steps 1-22 (Blacktop, Gutter, Curb) are all imbedded within the Sidewalk Sectional Area just entered in Steps 23-24. Imbedding Sectional Areas within other Sectional Areas creates Holes--in this case the Blacktop area is a Hole in the Gutter area, the Gutter area is a Hole in the Curb area, and the Curb area is a Hole in the Sidewalk area. Earthwork 3D/4D support this function and it is certainly the quickest way to model street subgrade and get useful paving area quantities as well. But Sectional Area Holes will not be recognized if the Sectional Areas are transferred to AGTEK's Materials 3D/4D programs (they will be overlapping areas). If you need Materials 3D/4D compatibility enter the Sidewalk, Curb, and Gutter Sectional Areas separately on each side of the street (that will double your entry time here, but the areas will be ready for Structure assignment in Materials 3D/4D).

Copyright (c) 2016 Earthwork Software Services, LLC. All rights reserved. www.EarthworkSoftwareServices.com

Street Model (Approach 1 - Full Finish Grade Detail)
Sectional Areas for Subgrade Model (Cont.)

Step 24 (Cont.): Start the first BSW *Line Snap* by double snapping the BSW start point (the snapped line will highlight).

Step 25: End the first BSW *Line Snap* by single snapping the highlighted BSW line's end point.

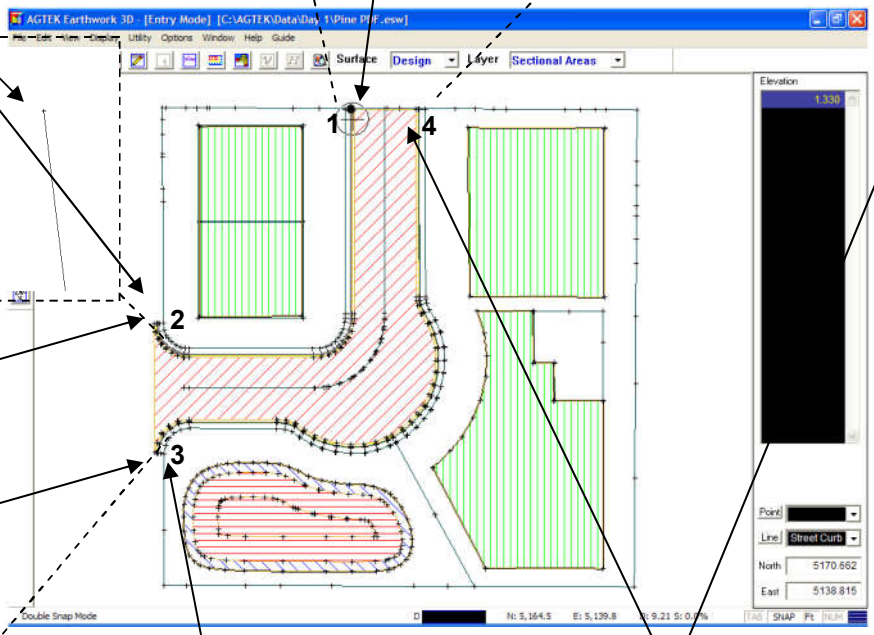

Step 26: Single snap the north EP line's end point.

Step 27: Single snap the south EP line's end point.

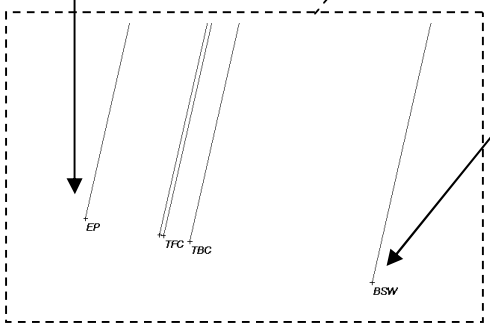

Step 28: Start the second BSW *Line Snap* by double snapping the BSW start point (the snapped line will highlight).

Step 29: End the second BSW *Line Snap* by single snapping the highlighted BSW line's end point.

Step 30: **Right** click (press **Blank**) twice to finish the entry and return the *Arrow* pointer.

Copyright (c) 2016 Earthwork Software Services, LLC. All rights reserved. www.EarthworkSoftwareServices.com

Street Model (Approach 1 - Full Finish Grade Detail)
Sectional Areas for Subgrade Model (Cont.)

Steps 1-30 established the desired subgrade breakouts for the street without requiring corresponding volume calculations (no Report Regions were entered). But we do need to know how much cut/fill is required at the street so we will enter one Report Region for the entire street area . . .

Step 31: (Optional) It may be helpful to hide the Design Perimeter and Daylight drape line before starting the next entry (see Tips box on page 5). **Alt-B** (Background Layer Selection) and **Alt-V** (toggle all background layers off/on) are useful display shortcuts.

Step 32: Change *Layer* to **Report Regions**, click the **Add Regions** utility button and complete the *Report Regions* dialog entries.

- Enter **Street Area** for the *Region Name*.
- If unchecked, check the **Report Region** option (for a cut/fill line item of this area on the Volume Report).
- If checked, uncheck the **Sectional Area** option (avoids conflict with previously entered street Sectional Areas).
- For this exercise, enter **1.15** for *Fill Factor*.
- Click **OK** to close the dialog and begin entering the Report Region boundary.

Step 33: *Snap* with **F6**/**F8** as needed to match the back of Street Sidewalk alignment along both sides (and across both ends) of the street—the same alignment as entered in Step 24. **Right** click (press **Blank**) twice to finish the entry and return the *Arrow* pointer.

Cut/fill for the entire street area will now be reported as one line item on the Volume Report but a detailed breakout of the four different street sub-areas will be provided on the same report under *Sectional Qtys*.

Note: If this Report Region is not entered, the street's cut/fill volumes will be included on the Volume Report's generic *Unspecified* line item. A Report Region provides absolute control over the description and breakout of the street's cut/fill volumes.

Reminder: Although this Report Region will be snapped to the same alignment as the Street Sidewalk Sectional Area, there is no conflict. Report Regions and Sectional Areas are different objects used for different purposes!

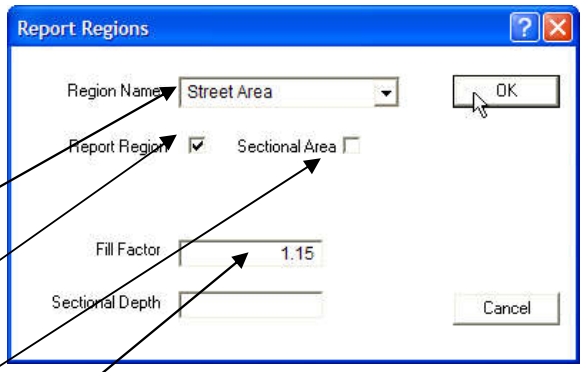

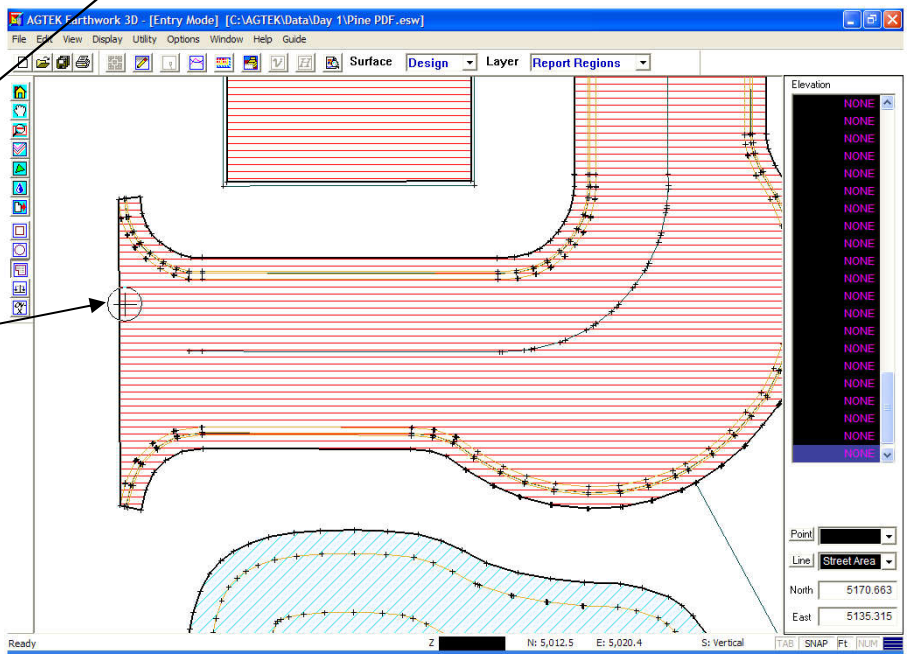

Copyright (c) 2016 Earthwork Software Services, LLC. All rights reserved. www.EarthworkSoftwareServices.com

Street Model (Approach 1 - Full Finish Grade Detail)
Street Quantities on Volume Report

(See *Day 1 Seminar Handbook* for Details on Generating the Volume Report)

Job: Pine Complete
Units: Ft-CY
Mon Sep 07, 2015 19:02:53 Page 1

Volume Report
Subgrade vs. Stripped

			Area		Volume		Comp/Ratio		Compact		Export	Change
	Total	Cut	Fill	OnGrade	Cut	Fill	Cut	Fill	Cut	Fill	-Import	Per .1 Ft
Landscape	31,084	20,075	11,009	0	660	354	1.00	1.15	660	407	253	132
Pond Area	7,746	4,207	3,538	1	350	211	1.00	1.15	350	243	107	33
Slab 1	7,240	2,590	4,650	0	116	237	1.00	1.15	116	273	-157	31
Slab 2	8,583	7,302	1,281	0	228	17	1.00	1.15	228	20	208	37
Slab 3	10,905	9,327	1,578	0	369	18	1.00	1.15	369	21	348	46
Slab Sub:	**26,728**	**19,219**	**7,509**	**0**	**713**	**272**			**713**	**314**	**399**	**114**
Street Area	16,823	16,819	4	0	1,611	0	1.00	1.15	1,611	0	1,611	72
Regions Total	**82,381**	**60,320**	**22,060**	**1**	**3,334**	**837**			**3,334**	**964**	**2,370**	**351**

Stripping Qtys	Plane Area	Slope Area	Depth	Volume
12" Debris / 5" Topsoil	4,864	4,890	1.420	257
6" Concrete Walk	429	433	0.500	8
Strip Topsoil	77,088	77,186	0.420	1,201
Stripping Total	**82,381**	**82,509**		**1,466**

The one *Report Region* (entered on page 12) provides a breakout of cut/fill quantities for the street area. *[See the Day 1 Seminar Handbook for details on interpreting AGTEK cut/fill quantities.]*

Sectional Qtys	Plane Area	Slope Area	Depth	Volume
Landscape	31,084	31,352	0.500	581
Pond Bottom	1,679	1,679	0.500	31
Pond Slope	4,049	4,267	0.500	79
Pond Top	2,018	2,017	0.330	25
Pond Sub:	**7,746**	**7,963**		**135**
Slab 1	7,240	7,254	0.670	180
Slab 2	8,583	8,583	0.670	213
Slab 3	10,905	10,905	0.670	271
Slab Sub:	**26,728**	**26,742**		**664**
Street Blacktop	13,324	13,329	1.330	657
Street Curb	370	370	1.330	18
Street Gutter	912	913	0.830	28
Street Sidewalk	2,217	2,218	0.670	55
Street Sub:	**16,823**	**16,830**		**758**
Sectional Total	**82,381**	**82,887**		**2,138**

The four *Sectional Areas* (entered on pages 4-11) provide a breakout of design quantities for each specified area of the street. *[See the Day 1 Seminar Handbook for details on interpreting AGTEK Sectional Area quantities.]*

Copyright (c) 2016 Earthwork Software Services, LLC. All rights reserved. www.EarthworkSoftwareServices.com